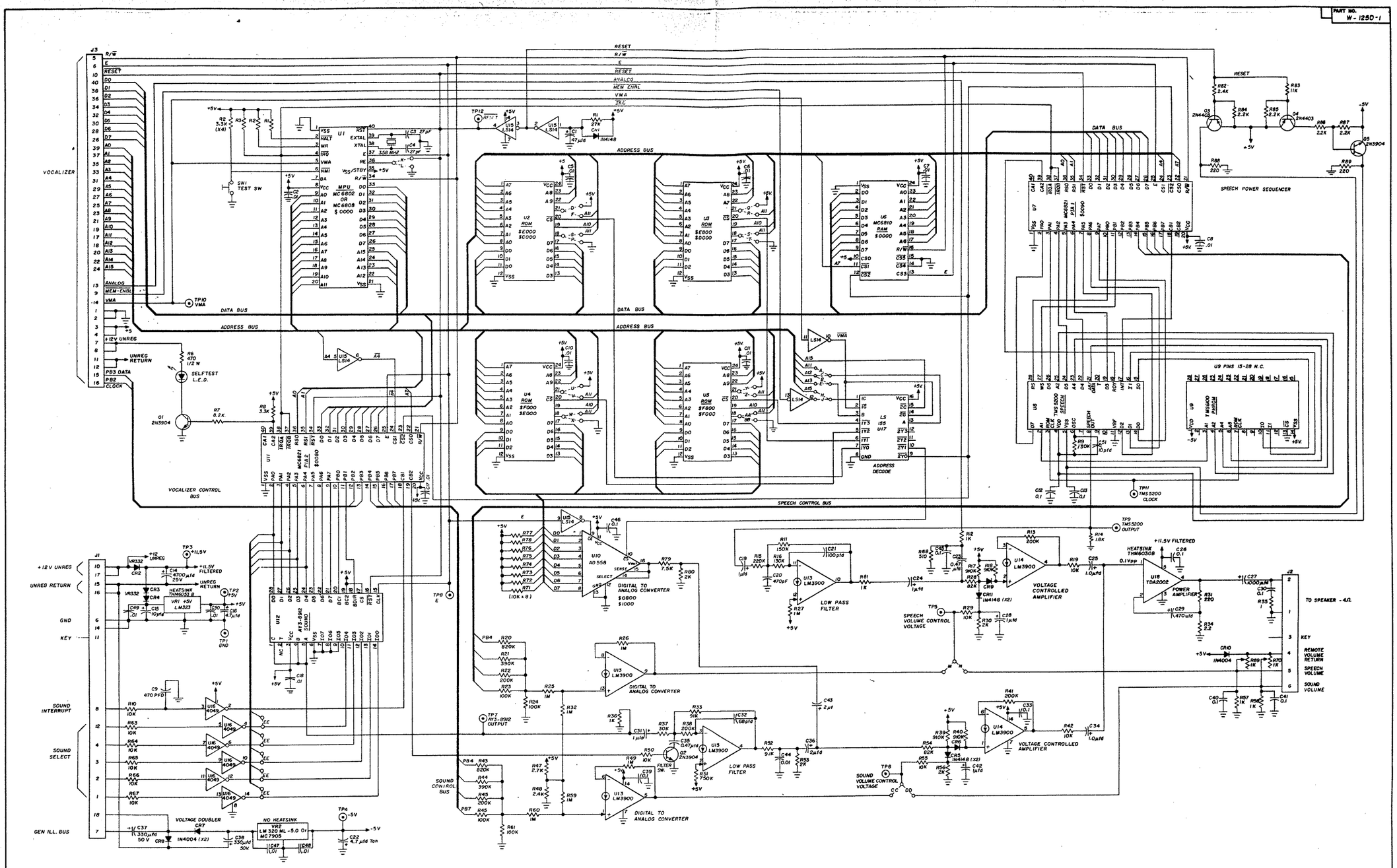

NOTES:

1. UNLESS OTHERWISE INDICATED ALL RESISTOR VALUES ARE IN OHMS.

LAST NUMBERS USED

R89
C51
CR10
U18
VR 2
Q5
TP12
EE

SQUAWK & TALK TEST POINTS

TP1 - GND
TP2 - +5VDC
TP3 - +11.5VDC
TP4 - -5VDC
TP5 - SPEECH VOLUME CONTROL VOLTAGE
TP6 - SOUND VOLUME CONTROL VOLTAGE
TP7 - AY3-8912 OUTPUT
TP8 - E PULSE
TP9 - TMS 5200 OUTPUT
TP10 - VMA
TP11 - TMS 5200 CLOCK
TP12 - RESET

SQUAWK & TALK JUMPERS

PROM-ROM		JUMPERS
2716	9316	A,B,D,RD,T,U,Y,X,BB
2532	9332	C,E,G,Q,S,U,W,Y,AA

NO VOCALIZER H
WITH VOCALIZER J

6808	MPU	L (WITH 6810 RAM)
6802	MPU	K (NO 6810 RAM)
NO AY3-8912		EE

COMPUTER VOLUME CONTROL
REMOTE VOLUME CONTROL

SPEECH	SOUND
CC	M
DD	N

NO.	LET.	CHANGE	DATE	BY
	A	R9 WAS 240K Ω	1/19/81	

ALL DESIGN, OPERATIVE AND PROCESS DATA PERTAINING TO THE ARTICLE SHOWN ON THIS SHEET IS THE PROPERTY OF BALLY MFG. CORP. PUBLISHED, THE INFORMATION IN BROUGHT IN CONFIDENCE AND IS NOT TO BE COPIED, REPRODUCED, DISCLOSED TO OR APPROPRIATED BY OTHERS, IN PART OR IN WHOLE, WITHOUT THE EXPRESS CONSENT OF THE OWNERS. THIS PRINT IS LOANED AND MUST NOT BE USED IN ANY MANNER DETRIMENTAL TO THE INTEREST OF THE OWNERS, AND MUST BE RETURNED ON DEMAND.

UNLESS OTHERWISE SPECIFIED
TOLERANCES ON
TRIGONOMETRIC DIMENSIONS UNLESS
OTHERWISE SPECIFIED
FRACTIONS ± .016
DECIMALS ± .003
EXCEPT HOLE DIA. ±
ANGLES ± 1/2°
DO NOT SCALE DRAWING

DR. BY FFC DATE 1-13-81
CK. BY A.M.C. DATE 1-13-81
APD. BY DATE
APD. BY DATE 1-16-81
FINISH:
HARDENING:

Bally MANUFACTURING CORP.
3640 BELMONT AVENUE
CHICAGO, ILLINOIS
#1220

MAKE CONTROL | DIE SIZE: | C.C.- | PT. PER M- | LBS. PER M-

NAME: SQUAWK & TALK SCHEMATIC A8
ASSEM. NO. USED: AS-2518-61
SCALE: 1/4
MATERIAL
CODE
PART NO. W-1250-1

OPER.	DEPT.	DESCRIPTION	TOOL NO.