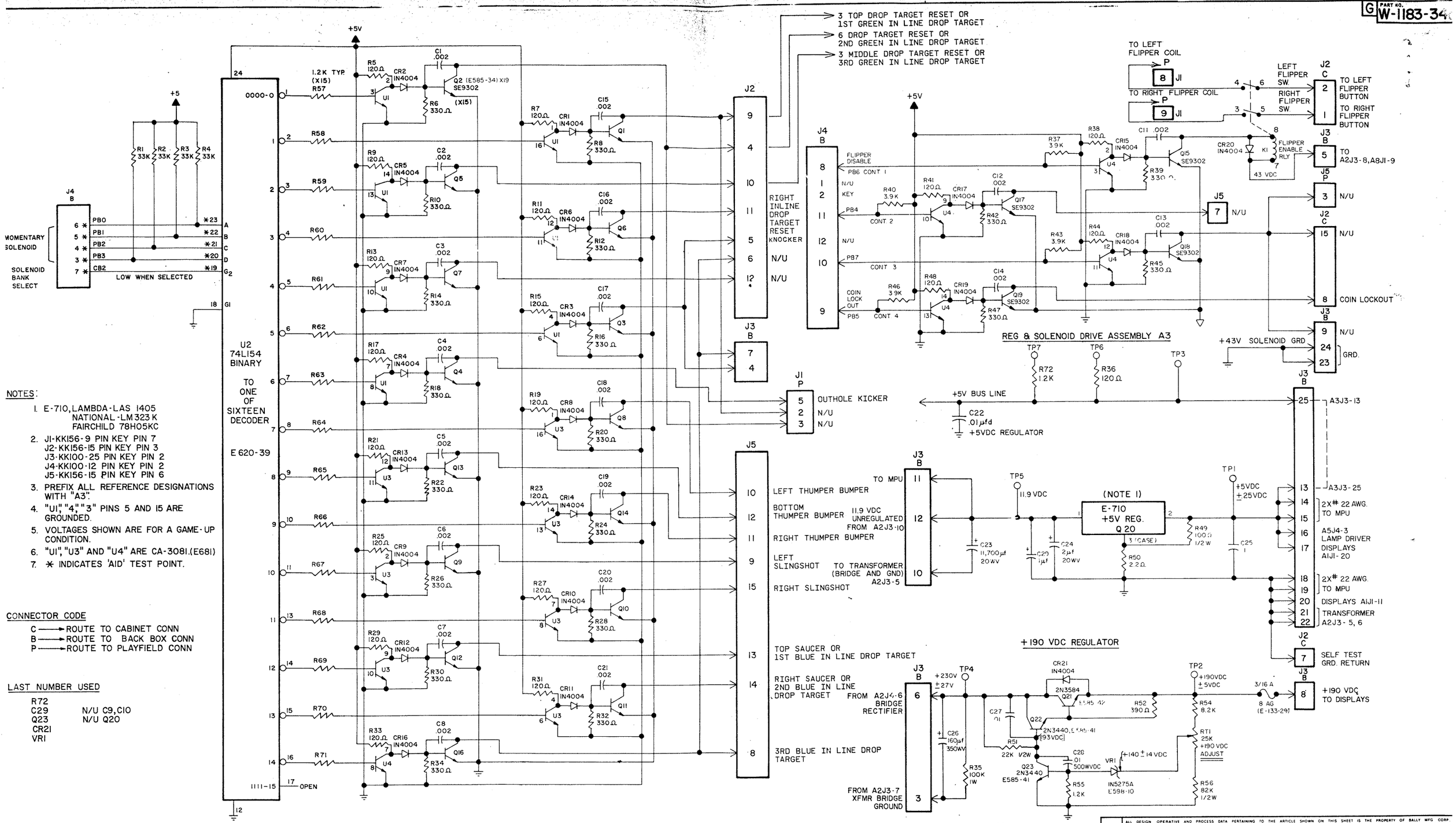


NOTES:

1. E-710, LAMBDA-LAS 1405
   NATIONAL-LM323K
   FAIRCHILD 78H05KC
2. J1-KK156-9 PIN KEY PIN 7
   J2-KK156-15 PIN KEY PIN 3
   J3-KK100-25 PIN KEY PIN 2
   J4-KK100-12 PIN KEY PIN 2
   J5-KK156-15 PIN KEY PIN 6
3. PREFIX ALL REFERENCE DESIGNATIONS WITH "A3".
4. "U1", "4", "3" PINS 5 AND 15 ARE GROUNDED.
5. VOLTAGES SHOWN ARE FOR A GAME-UP CONDITION.
6. "U1", "U3" AND "U4" ARE CA-3081.(E681)
7. ✱ INDICATES 'AID' TEST POINT.

CONNECTOR CODE

C ——▶ ROUTE TO CABINET CONN
B ——▶ ROUTE TO BACK BOX CONN
P ——▶ ROUTE TO PLAYFIELD CONN

LAST NUMBER USED

R72
C29 N/U C9, C10
Q23 N/U Q20
CR21
VR1

ALL DESIGN, OPERATIVE AND PROCESS DATA PERTAINING TO THE ARTICLE SHOWN ON THIS SHEET IS THE PROPERTY OF BALLY MFG. CORP. CHICAGO, ILL. THIS INFORMATION IS DISCLOSED IN CONFIDENCE AND IS NOT TO BE COPIED, REPRODUCED, REVEALED TO OR APPROPRIATED BY OTHERS, IN PART OR IN WHOLE WITHOUT THE EXPRESS CONSENT OF THE OWNERS. THE PRINT IS LOANED AND MUST NOT BE USED IN ANY MANNER DETRIMENTAL TO THE INTEREST OF THE OWNERS, AND MUST BE RETURNED ON DEMAND.

| NO. | LET | CHANGE | DATE | BY |
|---|---|---|---|---|

REMOVE ALL BURRS
TOLERANCES ON DIMENSIONS UNLESS OTHERWISE SPECIFIED
FRACTIONS ± 1/64
DECIMALS ± .
EXCEPT HOLE DIA ±
ANGLES ±
DO NOT SCALE DRAWING

| | | | |
|---|---|---|---|
| DR. BY | DATE | Bally MANUFACTURING CORP. 2640 BELMONT AVENUE CHICAGO, ILLINOIS | # 1233 |
| CK. BY | DATE | | |
| AP'D BY J.D. | DATE 5-5-81 | PRINT CONTROL / DIE SIZE / C.C. / FT. PER M. / LBS. PER M. | |
| AP'D BY | DATE | NAME: SOLENOID DRIVER VOLTAGE REGULATOR SCHEMATIC | ASSEM. NO. USED / SCAL |
| FINISH: | | | |
| HARDENING: | | MATERIAL CODE: FATHOM | PART NO. W-1183-34 |

| OPER. | DEPT. | DESCRIPTION | TOOL NO. |
|---|---|---|---|